學號 ：B10915061

姓名 ： 詹宗叡

Circuit 1:

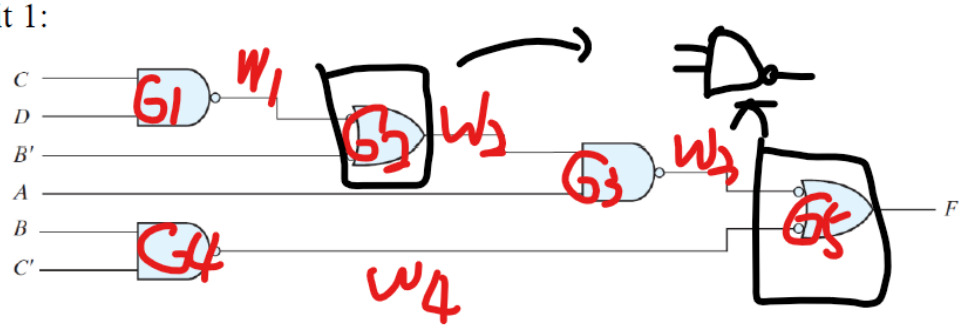


```
module Simple_Circuit (A, B, C, D, F);
   output F;
   input A, B, C, D;
   wire w1,w2,w3,w4;

   nand #10 G1(w1, C, D);
   nand #10 G2(w2, w1, ~B);
   nand #10 G3(w3, w2, A);
   nand #10 G4(w4, B, ~C);
   nand #10 G5(F, w3, w4);

endmodule

module t_Simple_Circuit;

   wire f;
   reg a, b, c, d;

   Simple_Circuit M1 (a, b, c, d, f);
   initial
   begin
           a = 1'b0; b = 1'b0; c = 1'b0; d = 1'b0;
           #100 a = 1'b0; b = 1'b0; c = 1'b0; d = 1'b1;
           #100 a = 1'b0; b = 1'b0; c = 1'b1; d = 1'b0;
           #100 a = 1'b0; b = 1'b0; c = 1'b1; d = 1'b1;
           #100 a = 1'b0; b = 1'b1; c = 1'b0; d = 1'b0;
           #100 a = 1'b0; b = 1'b1; c = 1'b0; d = 1'b1;
           #100 a = 1'b0; b = 1'b1; c = 1'b1; d = 1'b0;
           #100 a = 1'b0; b = 1'b1; c = 1'b1; d = 1'b1;
           #100 a = 1'b1; b = 1'b0; c = 1'b0; d = 1'b0;
           #100 a = 1'b1; b = 1'b0; c = 1'b0; d = 1'b1;
           #100 a = 1'b1; b = 1'b0; c = 1'b1; d = 1'b0;
           #100 a = 1'b1; b = 1'b0; c = 1'b1; d = 1'b1;
           #100 a = 1'b1; b = 1'b1; c = 1'b0; d = 1'b0;
           #100 a = 1'b1; b = 1'b1; c = 1'b0; d = 1'b1;
           #100 a = 1'b1; b = 1'b1; c = 1'b1; d = 1'b0;
           #100 a = 1'b1; b = 1'b1; c = 1'b1; d = 1'b1;

   end
   initial #1600 $finish;

   initial $dumpvars;
endmodule
```

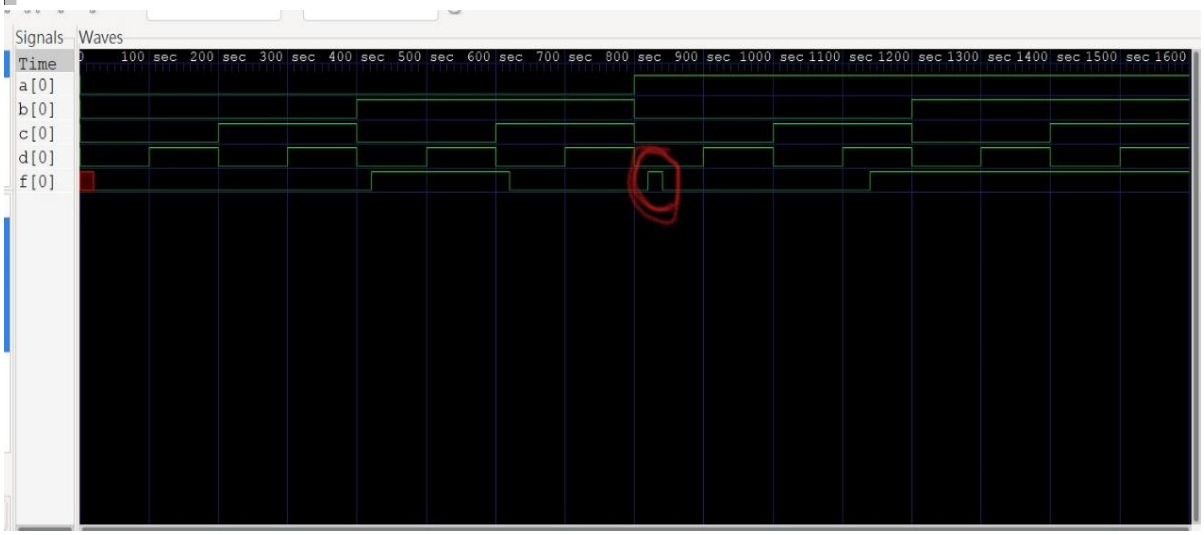

Circuit 2:

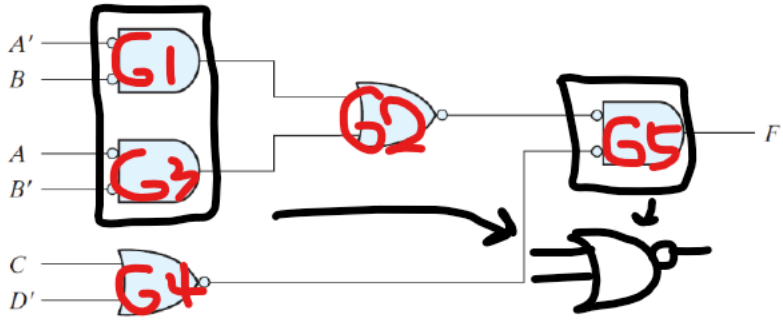


```
module Simple_Circuit (A, B, C, D, F);
   output F;
   input A, B, C, D;
   wire w1,w2,w3,w4;

   nor #20 G1(w1, ~A, B);
   nor #20 G2(w2, w1, w3);
   nor #20 G3(w3, A, ~B);
   nor #20 G4(w4, C, D);
   nor #20 G5(F, w2, w4);

endmodule

module t_Simple_Circuit;

   wire f;
   reg a, b, c, d;

   Simple_Circuit M1 (a, b, c, d, f);
   initial
   begin
           a = 1'b0; b = 1'b0; c = 1'b0; d = 1'b0;
           #100 a = 1'b0; b = 1'b0; c = 1'b0; d = 1'b1;
           #100 a = 1'b0; b = 1'b0; c = 1'b1; d = 1'b0;
           #100 a = 1'b0; b = 1'b0; c = 1'b1; d = 1'b1;
           #100 a = 1'b0; b = 1'b1; c = 1'b0; d = 1'b0;
           #100 a = 1'b0; b = 1'b1; c = 1'b0; d = 1'b1;
           #100 a = 1'b0; b = 1'b1; c = 1'b1; d = 1'b0;
           #100 a = 1'b0; b = 1'b1; c = 1'b1; d = 1'b1;
           #100 a = 1'b1; b = 1'b0; c = 1'b0; d = 1'b0;
           #100 a = 1'b1; b = 1'b0; c = 1'b0; d = 1'b1;
           #100 a = 1'b1; b = 1'b0; c = 1'b1; d = 1'b0;
           #100 a = 1'b1; b = 1'b0; c = 1'b1; d = 1'b1;
           #100 a = 1'b1; b = 1'b1; c = 1'b0; d = 1'b0;
           #100 a = 1'b1; b = 1'b1; c = 1'b0; d = 1'b1;
           #100 a = 1'b1; b = 1'b1; c = 1'b1; d = 1'b0;
           #100 a = 1'b1; b = 1'b1; c = 1'b1; d = 1'b1;

   end
   initial #800 $finish;

   initial $dumpvars;
endmodule
```

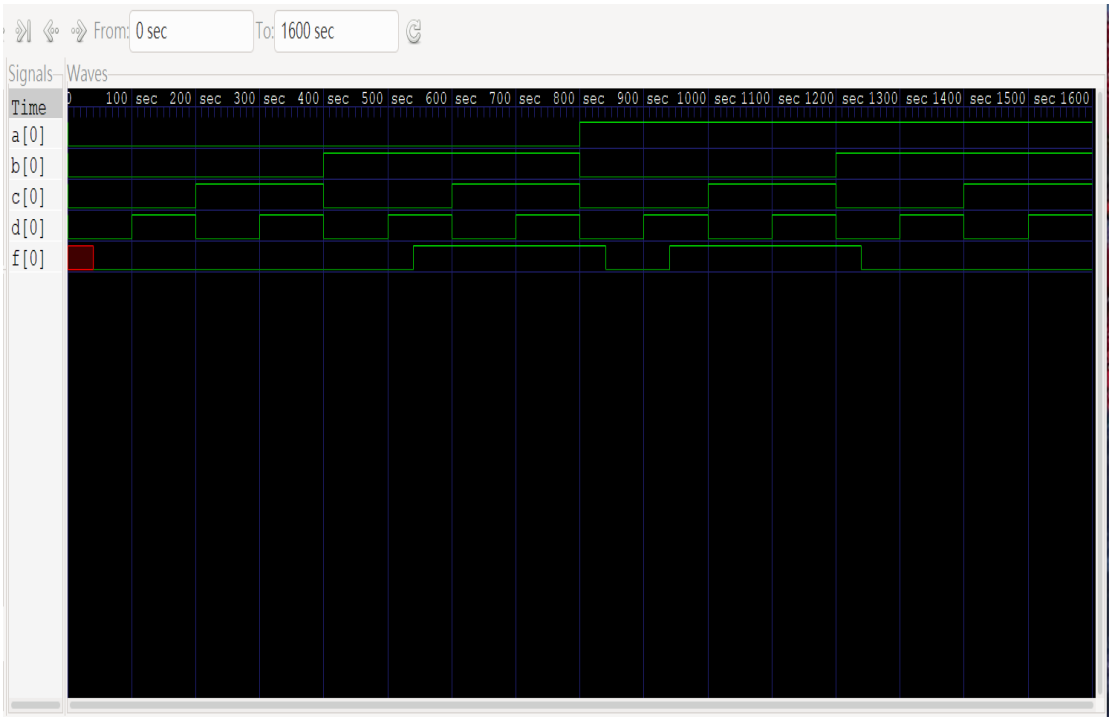
From: 0 sec
To: 1600 sec
Signals
Waves
Time
a[0]
b[0]
c[0]
d[0]
f[0]
100 sec 200 sec 300 sec 400 sec 500 sec 600 sec 700 sec 800 sec 900 sec 1000 sec 1100 sec 1200 sec 1300 sec 1400 sec 1500 sec 1600

Circuit 3:

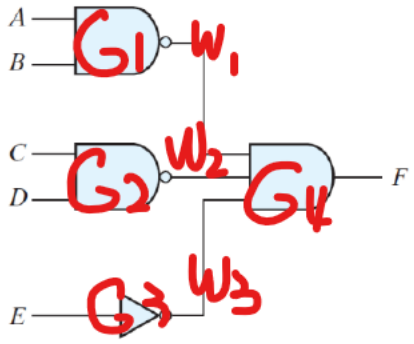


```
module Simple_Circuit (A, B, C, D, E, F);
   output F;
   input A, B, C, D, E;
   wire w1,w2,w3,w4;

   nand #20 G1(w1, A, B);
   nand #20 G2(w2, C, D);
   not #20 G3(w3, E);
   and #20 G4(F, w1, w2, w3);

endmodule

module t_Simple_Circuit;

   wire f;
   reg a, b, c, d, e;

   Simple_Circuit M1 (a, b, c, d, e, f);
   initial
   begin
           a = 1'b0; b = 1'b0; c = 1'b0; d = 1'b0; e = 1'b0;
           #100 a = 1'b0; b = 1'b0; c = 1'b0; d = 1'b0; e = 1'b1;
           #100 a = 1'b0; b = 1'b0; c = 1'b0; d = 1'b1; e = 1'b0;
           #100 a = 1'b0; b = 1'b0; c = 1'b0; d = 1'b1; e = 1'b1;
           #100 a = 1'b0; b = 1'b1; c = 1'b1; d = 1'b0; e = 1'b0;
           #100 a = 1'b0; b = 1'b1; c = 1'b1; d = 1'b0; e = 1'b1;
           #100 a = 1'b0; b = 1'b0; c = 1'b1; d = 1'b1; e = 1'b0;
           #100 a = 1'b0; b = 1'b0; c = 1'b1; d = 1'b1; e = 1'b1;
           #100 a = 1'b0; b = 1'b1; c = 1'b0; d = 1'b0; e = 1'b0;
           #100 a = 1'b0; b = 1'b1; c = 1'b0; d = 1'b0; e = 1'b1;
           #100 a = 1'b0; b = 1'b1; c = 1'b0; d = 1'b1; e = 1'b0;
           #100 a = 1'b0; b = 1'b1; c = 1'b0; d = 1'b1; e = 1'b1;
           #100 a = 1'b0; b = 1'b1; c = 1'b1; d = 1'b0; e = 1'b0;
           #100 a = 1'b0; b = 1'b1; c = 1'b1; d = 1'b0; e = 1'b1;
           #100 a = 1'b0; b = 1'b1; c = 1'b1; d = 1'b1; e = 1'b0;
           #100 a = 1'b0; b = 1'b1; c = 1'b1; d = 1'b1; e = 1'b1;
           #100 a = 1'b0; b = 1'b0; c = 1'b0; d = 1'b0; e = 1'b0;

           #100 a = 1'b1; b = 1'b0; c = 1'b0; d = 1'b0; e = 1'b1;
           #100 a = 1'b1; b = 1'b0; c = 1'b0; d = 1'b1; e = 1'b0;
           #100 a = 1'b1; b = 1'b0; c = 1'b0; d = 1'b1; e = 1'b1;
           #100 a = 1'b1; b = 1'b0; c = 1'b1; d = 1'b0; e = 1'b0;
           #100 a = 1'b1; b = 1'b0; c = 1'b1; d = 1'b0; e = 1'b1;
           #100 a = 1'b1; b = 1'b0; c = 1'b1; d = 1'b1; e = 1'b0;
           #100 a = 1'b1; b = 1'b0; c = 1'b1; d = 1'b1; e = 1'b1;
           #100 a = 1'b1; b = 1'b1; c = 1'b0; d = 1'b0; e = 1'b0;
           #100 a = 1'b1; b = 1'b1; c = 1'b0; d = 1'b0; e = 1'b1;
           #100 a = 1'b1; b = 1'b1; c = 1'b0; d = 1'b1; e = 1'b0;
           #100 a = 1'b1; b = 1'b1; c = 1'b0; d = 1'b1; e = 1'b1;
           #100 a = 1'b1; b = 1'b1; c = 1'b1; d = 1'b0; e = 1'b0;
           #100 a = 1'b1; b = 1'b1; c = 1'b1; d = 1'b0; e = 1'b1;
           #100 a = 1'b1; b = 1'b1; c = 1'b1; d = 1'b1; e = 1'b0;
           #100 a = 1'b1; b = 1'b1; c = 1'b1; d = 1'b1; e = 1'b1;


   end
   initial #400 $finish;

   initial $dumpvars;
endmodule
```

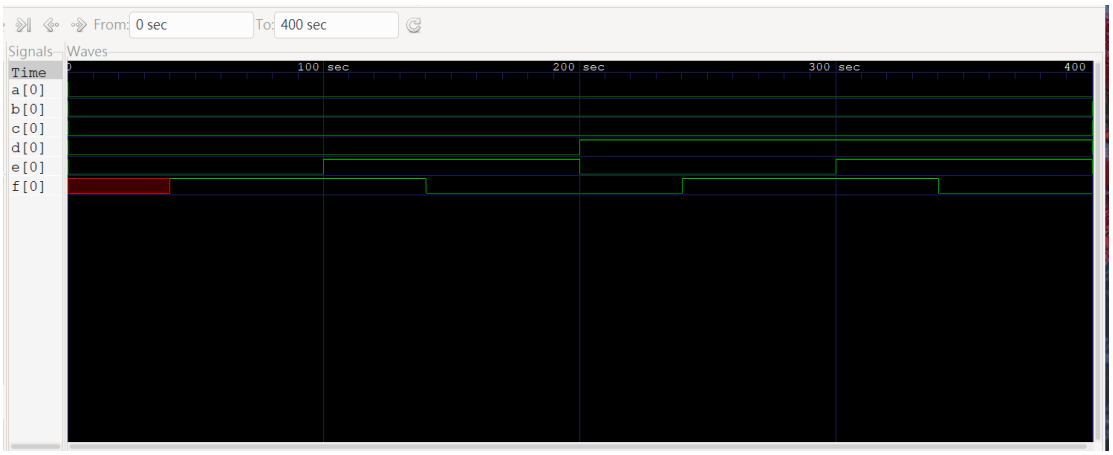
From: 0 sec
To: 400 sec
Signals
Waves
Time
a[0]
b[0]
c[0]
d[0]
e[0]
f[0]
0
100 sec
200 sec
300 sec
400